GALEM COMPACT 300

	Technical Specifications
	300-2-A200
Collector	
Number of collectors	2
Area of collector	3.82m²
Absorber Surface	3.46m²
Weight	41kg each
Absorber Fins	Aluminum full face sheet with non-selective treatment. Welded to copper pipe with laser welding. a = 90% e = 86% (±0.02)
Casing	Aluminum profile epoxy powder oven painted. Free of screws and rivets. Sea Water resistant.
Glassing	Tempered low iron glass 4 mm. 88.5% transmission.
Sealing	EPDM Rubber
Tank	
Nominal Capacity	300ltr
Dimensions	2080mm x Ø530
Weight empty	106kg
Weight filled	396.50kg
Boiler body	The boiler "body" is made from 2.5mm USD 37.2 steel plate. The boiler is (glass) enameled with the advanced double "direct" method "fired" at 860℃
Heat exchanger	Internal "double jacket" heat exchanger made from 1.5 mm U.S.D. 37.2 steel sheet
Insulation	Polyurethane 40mm thickness casted under pressure with density 40kg/m³
External Cover	Silver color (Stainless steel cover is optional)
Anode protection	Magnesium rod
Solar Safety Valve	Safety valve: 2.5at
Max. working pressure	10 at
Electric element 2-4kW	

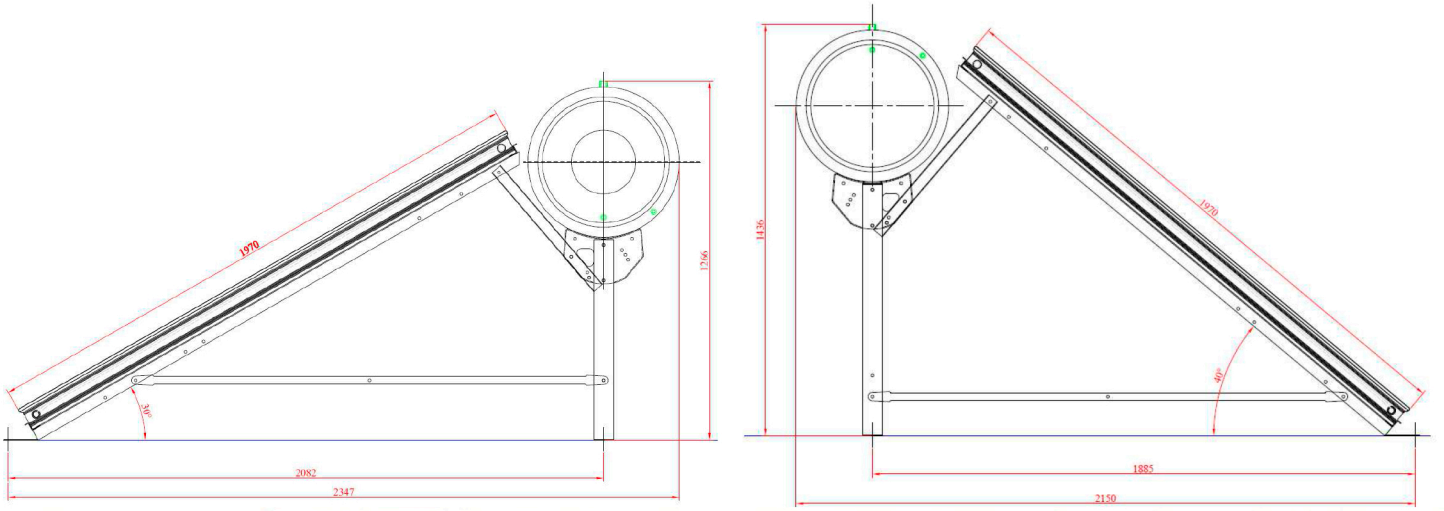

Polígono Industrial Cabezo Beaza. Avda. Berlín, Parc 14H •30353 Cartagena •Murcia•España
Tlf: (+34) 968 324 742 Fax (+34) 968 324 742 • www.grupogalem.com •E-mail: info@grupogalem.-